DCC+G

Direct Current Components and Grid

General description

380 V DC power grids are the most energy-efficient electricity distribution method in buildings. Furthermore, building-integrated solar power systems with DC grid connection are lower cost and have a faster return on investment (ROI) than classical 230V/400V AC power distribution grids. Thus DC power grids support European 20-20-20 targets as well as several of ENIAC's Grand Challenges on "Reduction of Energy Consumption", "Energy Distribution and Management – Smart Grid" as well as "Sustainable and Efficient Energy Generation".

The DCC+G project is therefore developing system components for pilot installations based on innovative semiconductor power technologies. Original system components will be developed, ranging from safety devices such as fuses, switches, circuit breakers and protection devices to lighting systems, solar and combined heat and power systems and finally a DC grid controller and central AC/DC converter system as a mains interfacing module.

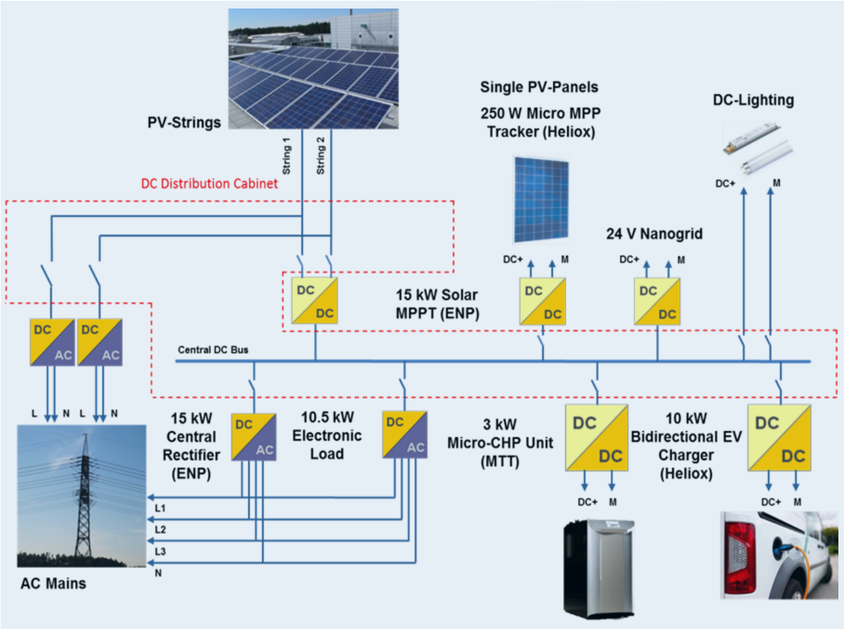

Office building demonstrator at Fraunhofer IISB

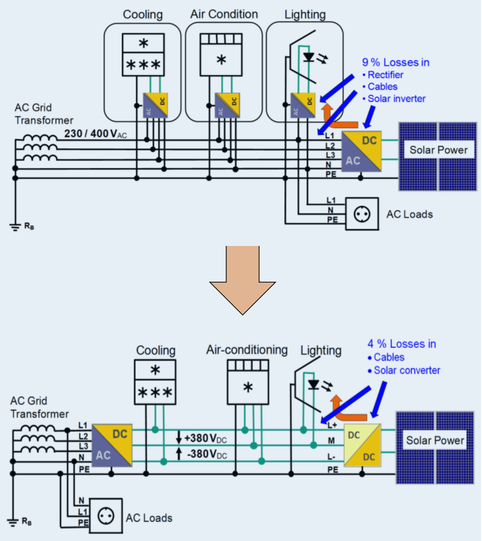

AC (top) and DC (bottom) power distribution architectures

Objectives

- Develop DC power grid technology as a standard for future energy-efficient building installations linking lighting, solar/renewables, heating, ventilation, air conditioning and other building elements.
- Reduce power consumption of buildings by at least 5% and increase the efficiency of solar power systems and other local energy generation by 7%.
- Realize **office test bed** that demonstrates the energy saving potentials of DC power grids

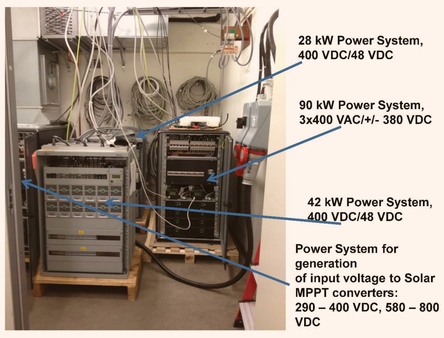

Central rectifier system and MPPT modules (ENP)

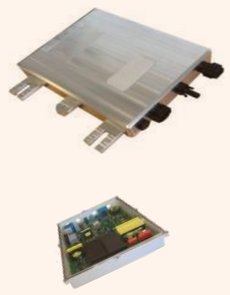

250W solar MPPT unit (Heliox)

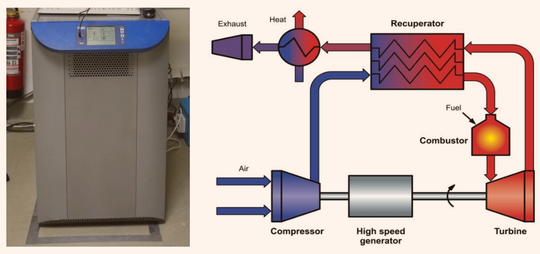

DC Micro-CHP unit (MTT)

Results

DCC+G project members have achieved considerable results developing innovative, high efficient devices and technologies towards achieving the main goals of the project. Those achievements include:

- Development of the next improved generation of the MPT-IGBT technology with respect to losses, switching speed, and immunity against electrical shorts
- Galvanically isolated current-, voltage-, and power- sensors based on magnetoresistance with high-accuracy and low power consumption
- Hybrid and specially adapted electro-mechanical switches to address the arcing problem
- Micro-CHP Unit and solar thermal UHV collectors
- Solar micro converter and electric vehicle compact charger
- Central rectifier and MPPT modules
- DC-grid demonstrator with LED lighting installations and the monitoring system in a phase of deployment
- DC powered compressor system for freezers and refrigerators

Power monitoring subsystems for AC (top) and for DC (bottom) (Siemens)

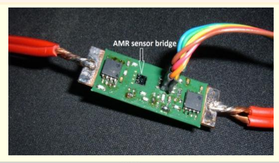

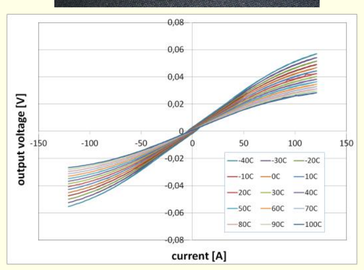

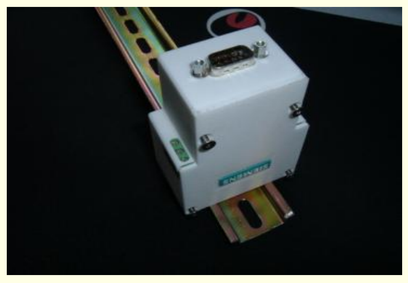

AMR current sensor and its V-I graph (left); digital voltage sensor (right) (Siemens, Infineon)

OSMPS for Fluorescent Lamps (Fraunhofer IISB)

DC LED Luminaries (Philips)

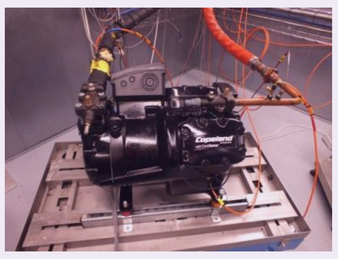

High efficient compressor/motor concept (Emerson Climate Technologies)

DC vs AC

380 V DC power grids have multiple advantages compared with 230 V/400V AC power distribution in various aspects.

- The solar cells of solar power systems generate DC current , therefore, it is obviously consequent to connect DC power sources and loads by means of the DC grid saving 5% of solar power comparing to AC based solar systems.
- A central AC/DC rectifier can save about 3% power compared with individual rectifiers used in different applications, such as lamp drivers.
- Power cables operating at 380 V DC can save up to 2 % of power and 56% of the copper compared to a 3-phase AC grid.

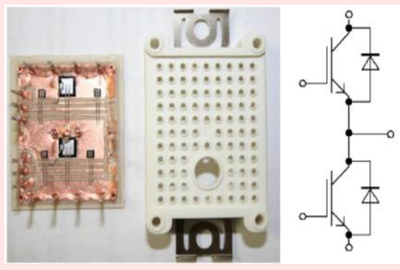

Low power "Easy-Module" (left), its components (middle), containing a half-bridge circuitry (right) (Infineon)

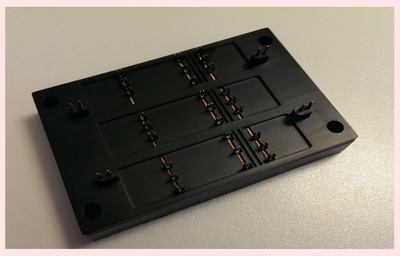

16 IGBTs Low-inductive high-power module (Infineon)

Additional information

For additional information please contact the project leader Dr. Roland Weiss or visit the public webpage www.dcc-g.eu

5 A Light switch for 380 V DC in hybrid technology (E-T-A)

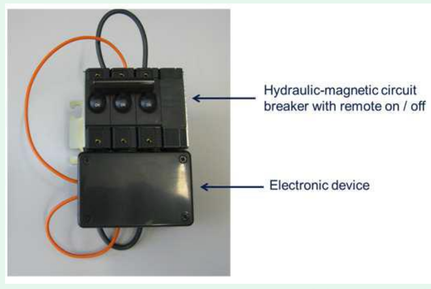

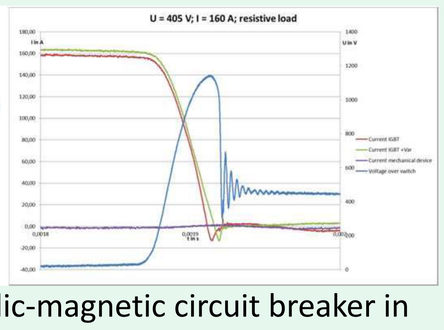

160 A Prototype of hydraulic-magnetic circuit breaker in hybrid and its turn off diagram (E-T-A)

Kirill Rykov
Company: Eindhoven University of Technology,
Den Dolech 2, 5612AZ Eindhoven
Email: k.rykov@tue.nl

www.dcc-g.eu
www.eniac.eu